Gas Control Turbine Meters

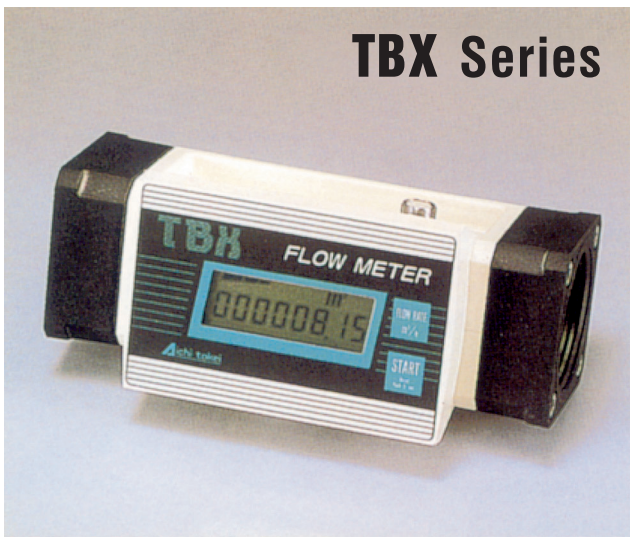

Low Pressure Drop

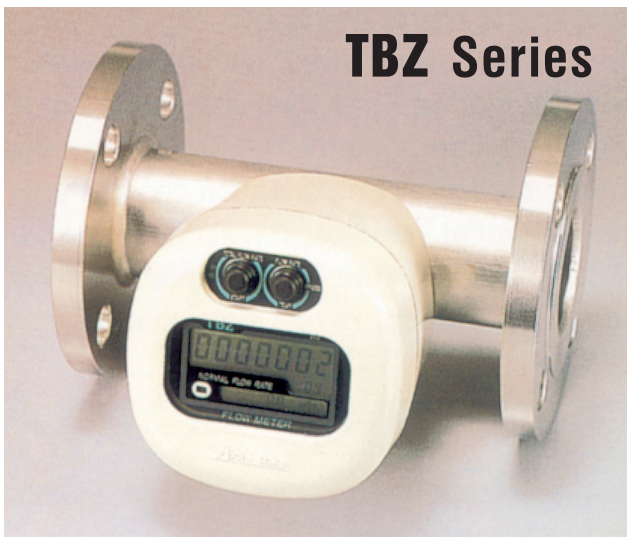

Offering great economies in space and cost, and high degree of accuracy in measurement

The TBZ and TBX Series of turbine meters were developed to measure the gas consumption of small boilers, industrial furnaces, other individual pieces of equipment.

The TBZ and TBX Series are precise and inexpensive — they are compact, light, and stylish too. They can handle a wide range of pressures and flows. Two built-in pulse oscillators allow remote meter-reading — or the configuration of an advanced energy management system. The TBZ Series even offers a temperature/pressure compensation capability — gas flow is converted to standard conditions for display.

The TBZ and TBX Series of gas meters were jointly developed by Tokyo Gas and Aichi Tokei Denki, leaders in energy management.

Features

- Much smaller and less expensive than conventional gas meters
- High precision (±1% volume at full scale)
- Versatile series line-up — maximum pressure of 1.0, 3.5 or 9.9 kgf/cm² — maximum flow from 30 to 300m³/h
- Two built-in pulse oscillation systems allow remote meter-reading and connection to a computer for a thermal management system
- Can handle not only town gas but also LP gas, air, nitrogen, and other gases
- Can display cumulative flow, instantaneous flow, and trip flow
- Can be mounted in any position
- Needs no external power source — built-in lithium battery lasts for 10 years of non-stop operation
- Automatic compensation for temperature/pressure variations-converts gas flow to standard conditions for display along with temperature and pressure (TBZ Series only)
- Models (TBXs) of flow sensor type without local display available for dedicated remote meter-reading

TBX Series

The TBX Series of turbine meters is for use at low pressures (maximum usage pressure of 1.0 kgf/cm²). Meters in this series are compact and threaded for easy installation (flanged models,TBX100F,TBX150F,also available).

Dimensions / Model	L	H	W
TBX30	170	74	73
TBX100	200	100	85
TBX100F	200	161	φ155
TBX150F	200	148	φ155

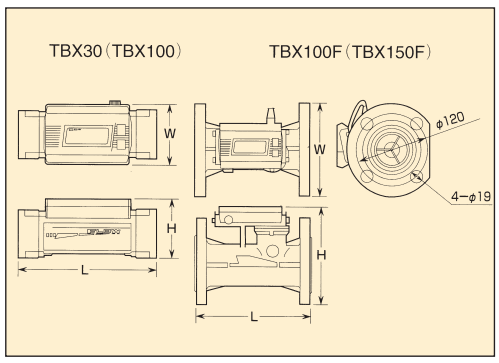

The display unit on the TBX100F (TBX150F) can be freely moved about to match the gas flow direction. In addition, the entire display unit can be removed and placed up to three meters away.

TBZ Series

The TBZ Series are medium and high-pressure turbine meters—maximum pressure is 3.5 or 9.9kgf/cm². Those with temperature/pressure compensation convert gas flow to that at standard conditions for display.

Dimensions / Model	L	H	W	JIS 10K Flange			
				φD	φd	a-φb	Dia.
TBZ60	200	150	197	140	105	4-19	1½B
TBZ150	220	158	211	155	120	4-19	2B
TBZ300	250	185	246	185	150	8-19	3B

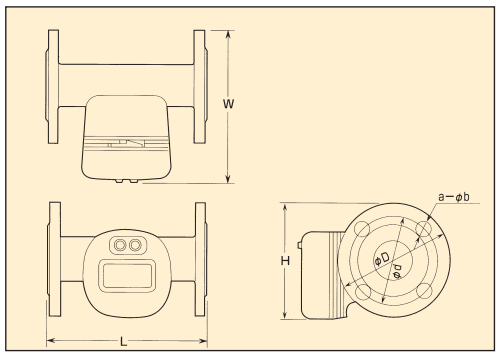

Instrument configuration

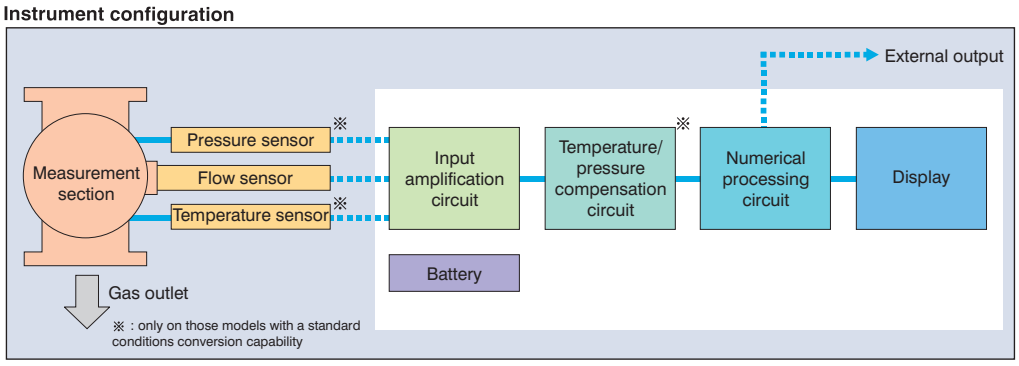

Specifications

Model		TBX 30	TBX 100	TBX 100F	TBX 150F	TBZ 60	TBZ 150	TBZ 300
Flow range (m³/h)※1		1.5~30	5~100	5~100	7~150	(3)~60	(7)~150	(15)~300
Max. pressure (kgf/cm²)		1.0				3.5 or 9.9		
Accuracy	Flow measurement section	±1%FS				±1%FS		
	Arithmetic display section※2					±2%RS max.		
Display	Integrated flow	LCD 8 digits Minimum reading 10 liters			LCD 8 digits Minimum reading 100 liters	LCD 9 digits Minimum reading 10 liters		
	Trip	LCD 6 digits Minimum reading 10 liters			LCD 6 digits Minimum reading 100 liters	LCD 8 digits Minimum reading 10 liters		
	Instantaneous	LCD 4 digits Minimum reading 0.1m³/h			LCD 3 digits Minimum reading 1m³/h	LCD 4 digits Minimum reading 0.1m³/h		
	Temperature	—				LCD 3 digits Minimum reading 0.1℃ ※3		
	Pressure	—				LCD 3 digits Minimum reading 0.01kgf/cm² ※4		
Temperature/ Pressure compensation		—				Built-in temperature and pressure sensors ※5		
Connection		1" 1¼" 1½"	PT 2B	2B Flange (JIS10K)		1½B Flange (JIS10K)	2B Flange (JIS10K)	3B Flange (JIS10K)
Acceptable temperature range (℃)		0~+60			−10~+60	−10~+60		
Installation position		Horizontal, Vertical				Horizontal, Vertical (Display section turns)		
Measurable gases		Natural gas, LPG, Air, etc.						
Battery		Built-in lithium battery with a life of 10 years (approx.)						
Output pulse		2-System open collector output (Compensation pulse, Non-Compensation pulse)						
Installation		Indoor				Indoor/Outdoor (Dripproof structure)		
Case material		Aluminum alloy		Cast iron	Aluminum alloy	Body/Flange : Stainless steel ※6 Display : Aluminum alloy		
Weight (kg)		0.8	1.8	7.0	2.5	5.3	6.0	9.4

※1 : That enclosed in parenthesis ( ) indicates the lower limit of the flow range. Note, however, that this limit gets lowers as pressure increases.
※2 : Precision refers to the total cumulative precision of the temperature sensor, pressure sensor, numerical processor, and display. (Not applicable to actual flow models. Precision for a standard condition conversion model (maximum pressure : 9.9 kgf/cm²) is ±3% RS max.)
※3 : This setting is only applicable to standard condition conversion models (with temperature/pressure compensation).
※4 : This setting is only applicable to standard condition conversion models (with temperature/pressure compensation and pressure compensation).
※5 : No settimg is made for actual flow models. For models with pressure compensation only, there is no temperature sensor setting. Also, there are two types of pressure sensors - a high precision type (for use with models having a maximum usage pressure of 3.5 kgf/cm²) and an intermediate precision type (for models having a maximum usage pressure of 9.9 kgf/cm²).
※6 : Only actual flow models have a stainless steel main tube, and flanges are made of cast iron. The entire unit is coated with baked-on acrylic paint.
※7 : Please avoid installing this device where polymerized carbon (C5 or over) from LP gas or town gas or dust powder, etc. may come flying.

Specification may change without notice.

Manufacturer:
AICHI TOKEI DENKI CO., LTD.
2-70, Chitose 1-Chome, Atsuta-ku
Nagoya Japan 456-91
TEL:052(661)5151 FAX:052(661)6418

Distributor
TOKYO GAS ENGINEERING CO., LTD.
18F, SHINJUKU PARK TOWER,
TOKYO 163-1018, JAPAN
TEL : 81-3-5322-7506 FAX : 81-3-5322-7524